A119QBA1

Released by HIWIN design group.

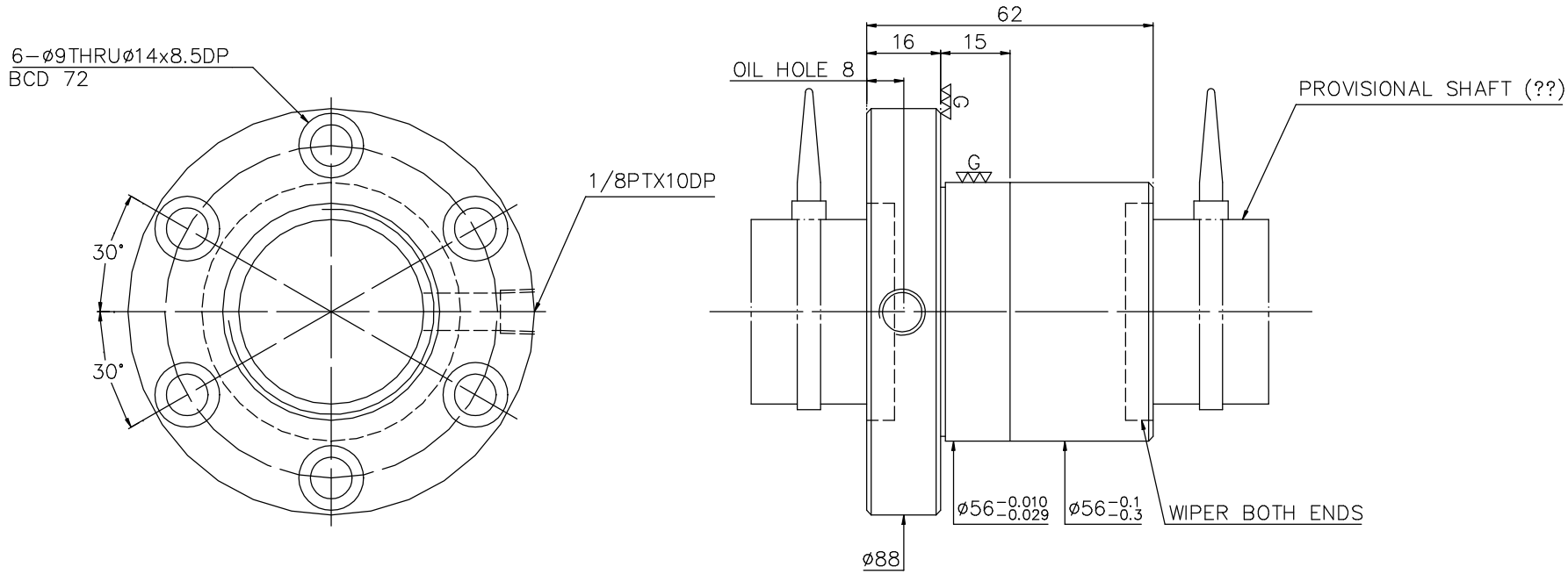

SPEC:R40-6.35T4-FSI

MAX. AXIAL LOAD (kgf)		LUBRCATION		PRELOAD (kgf)	–
MAX. ROTATIONAL SPEED (rpm)		SPACE BALL		R.D.	–
DN VALUE		E1 TYPE ASSEMBLY METHOD		S.F. (kgf)	———
MAX. FEED RATE (m/min)		CUSTOMER DRAWING NO.		DRAG TORQUE (kgf-cm)	———
ACCELERATION (m/sec²)		CUSTOMER MC TYPE		DIRECTION OF TURN	R
SUPPORT METHOD		CUSTOMER AXIAL TYPE		P.C. DIA.	40.5
				BALL DIA.	3.969
				BACKLASH	
				CIRCUIT	4
				LEAD ANGLE	2.86
				DYNAMIC (kgf)	1929
				STATIC (kgf)	5776
				LEAD	6.35

THREAD LENGTH

+ 0 –

T, +E, –E

e300: –

E: –

UNCHAMFERED USE ☐R0.5 ■R1 ☐R

ROUGH M/C	FIN M/C	GRD	SCALE
25a	6.3a	0.4a	1:X

NORMAL TOLERANCE mm

UP TO 6	6 30	30 120	120 300	300 600	600 1200	1200 2400	OVER 2400
±0.1	±0.2	±0.3	±0.4	±0.5	±0.8	±1.0	±1.5

HIWIN® BALLSCREWS

MAT.	SH: ROLLED	DATE	2008.04.25
	NT: SNCM220/Equivalent	DWG	JANET
THREAD BALL TRACK HRC 56 ~~ 62		APPD	MICHELLE
		PROCESS NO.	G
CUSTR			
DWG.NO.	A119QBA1		

*BREAK SHARP EDGE UNLESS OTHER SPECIFIED.
*??????R0.5MAX

THREAD END ALLOWS ABOVE LENGTH OUT OF HARDNESS TOLERANCE

DATE	MODIFICATION	APPROVED

* PLEASE IGNORE CHINESE CHARACTERS WHICH ARE FOR OUR REFERENCE ONLY.